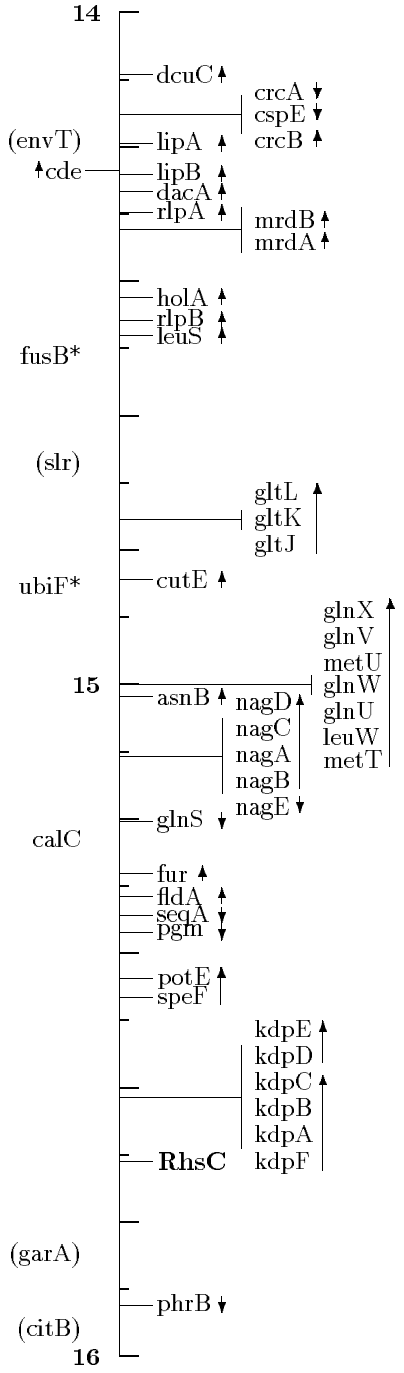
14
dcuC
crcA
cspE
crcB
(envT)
lipA
cde
lipB
dacA
rlpA
mrdB
mrdA
holA
rlpB
leuS
fusB*
(slr)
gltL
gltK
gltJ
ubiF*
cutE
glnX
glnV
metU
glnW
glnU
leuW
metT
15
asnB
nagD
nagC
nagA
nagB
nagE
glnS
calC
fur
fldA
seqA
pgm
potE
speF
kdpE
kdpD
kdpC
kdpB
kdpA
kdpF
RhsC
(garA)
phrB
(citB)
16